Ref.no:	Ordering no:	Qty:	Description
1	4430 -0783 -00	1	Back head
5 (8-18)	4210 -0478 -84	1	Motor, compl.
8	**service kit*	*2*	*Ball bearing - 625-2RZ.*
9 (10,11)	4430 -0782-80	1	End plate , compl.
10	---	1	End plate.
11	**service kit*	*2*	*Pin (Sp 1,5 x 14)*
12	4430 -0780-00	1	Cylinder.
14	4210 -0478-01	1	Rotor (z=7)
15	4210 -0479-90	5	Vane.
15	**service kit*	*5*	*Vane.*
16 (17,18)	4430 -0779-80	1	End plate, compl.
17	---	1	End plate.
18	** service kit*	*1*	*Pin (Sp 1,5 x 6)*
*	4081 -0215-90	1	Service kit - Included in Service Kit:
8	**service kit*	2	Ball bearing - 625-2RZ.
11	**service kit*	2	Pin (Sp 1,5 x 14)
15	**service kit*	5	Vane.
18	** service kit*	1	Pin (Sp 1,5 x 6)

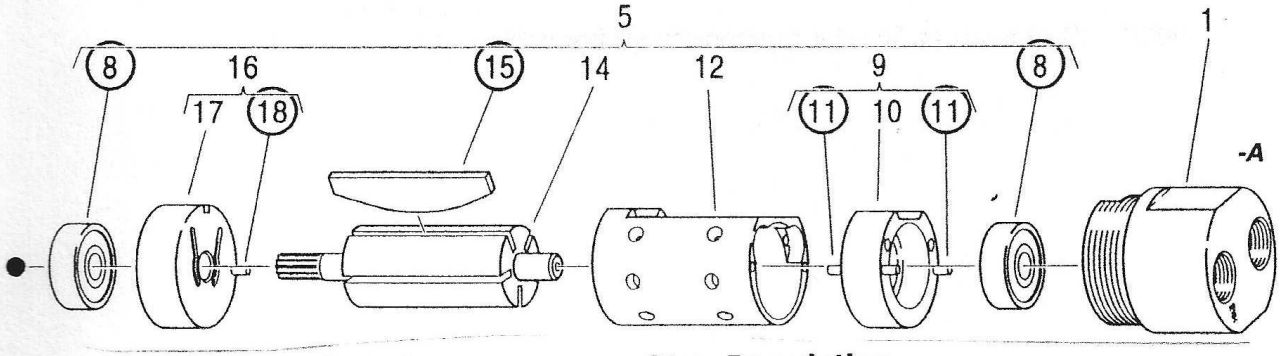

Ref.no:	Ordering no:	Qty:	Description
20	4430 -0787-00	1	Front part.
21	0666 -8100-26	1	Seal ring (G14/20x3)
23	4210 -0528-00	1	Nut
24	4090 -0195-00	2	Ball bearing (EE3 TN9)
25	4210 -0502-00	1	Spacer 2,5h5x9,1
26	4430 -0829-00	1	Spacer
27	4430 -0778-00	1	Motor casing
29	4210 -0474-00	1	Washer
30	4210 -0475-00	2	Cup spring
39 (40,48)	4430 -0788-80	1	Planetary shaft, compl.
40	---	1	Planet shaft UNF 5/16"-24.
48	4210 -0526-00	3	Axle pin 2,5h5x9,1
49	4430 -0785-00	1	Driver

